PRODUCT SPECIFICATION

35315
ZERO SMOOTH BASIN SET, TALL

FEATURES
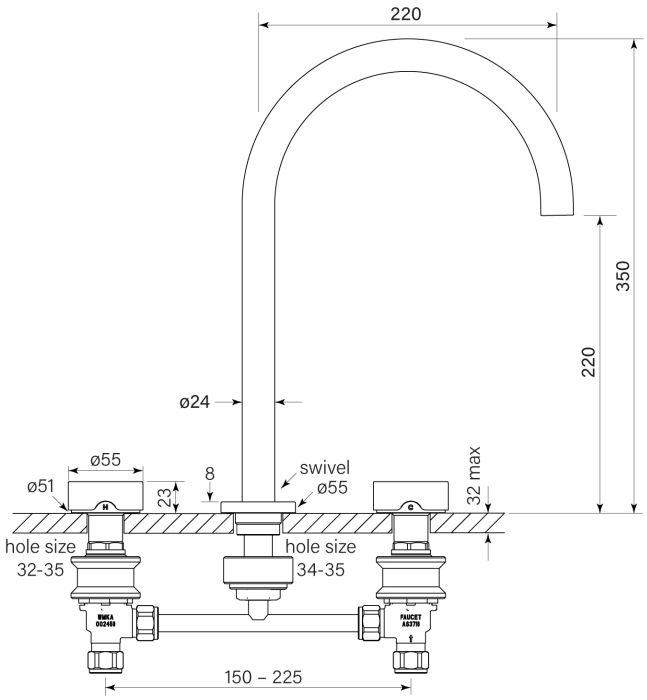
- WELS 5* 6lpm
- Quarter turn ceramic cartridges
- Swivel spout with 220mm reach