PRODUCT SPECIFICATION

35345
ZERO PROGRESIV FLUTED SINK MIXER PULL DOWN

FEATURES
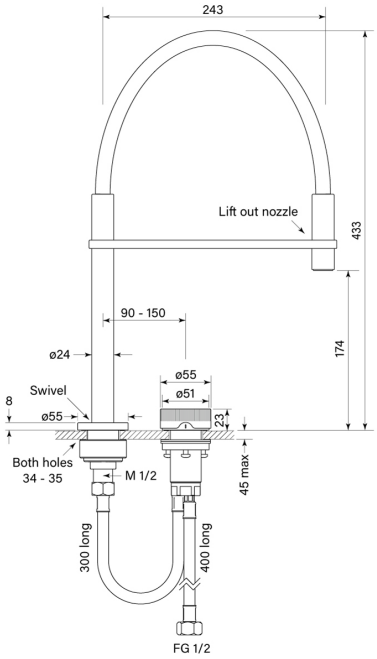
- Half turn Progresiv ceramic valve
- Fine fluted texture on handle
- Mount through 35 mm tap holes
- Match with Pegasi showers & accessories
- Swivel spout reach 240 mm
- Chef Style with lift out spout
- Non scratch polymer nozzle
- Tough flexible rubber hose
- WELS 4* 7.5 lpm
- WELS registration number T36225