PRODUCT SPECIFICATION

35162
ZEOS TOILET BRUSH HOLDER

FEATURES
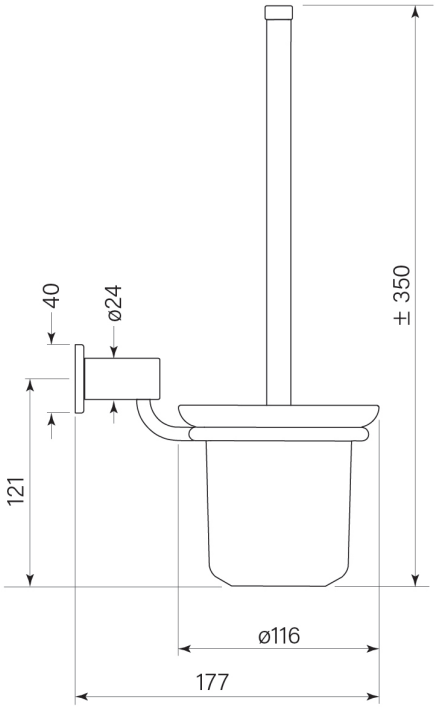
- Robust solid brass mount
- Glass bowl
- Replacement brushes & bowls available