PRODUCT SPECIFICATION

# 31792
# CHISEL D LEVER SPA SET HOB

FEATURES
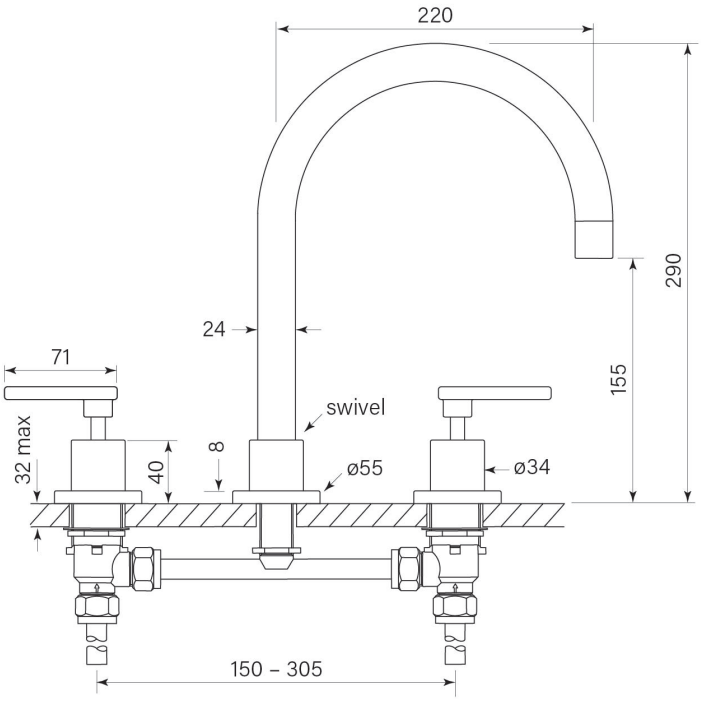
- Coordinate with Pegasi showers and accessories
- Smooth action ceramic disc valves
- 1/4 turn lever handles
- Swivel spout reach 220 mm
- Mount handles through 32-35 mm holes
- Mount spout through 24-30 mm hole
- Max 32 mm mount thickness
- Free flow spout