PRODUCT SPECIFICATION

30907
ZERO PROGRESIV SMOOTH SINK MIXER PULL DOWN

FEATURES
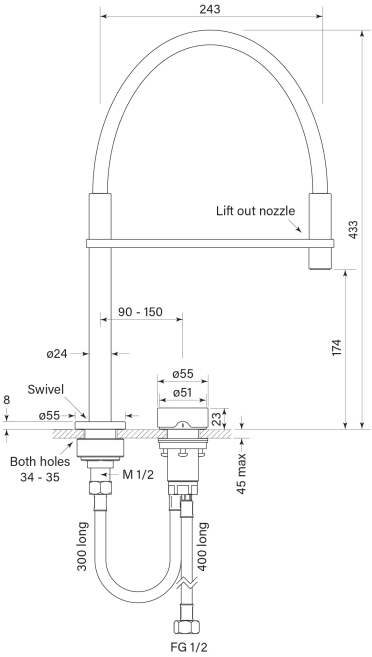
- Half turn Progresiv ceramic valve
- Smooth Handle
- Mount through 35 mm tap holes
- Match with Pegasi showers & accessories
- Swivel spout reach 240 mm
- Chef Style with lift out spout
- Non scratch polymer nozzle
- Tough flexible rubber hose
- WELS 4* 7.5 lpm
- WELS registration number T36225 / T36225 (V)