PRODUCT SPECIFICATION

30698
PEGASI M BASIN MIXER SQUARE 160

FEATURES
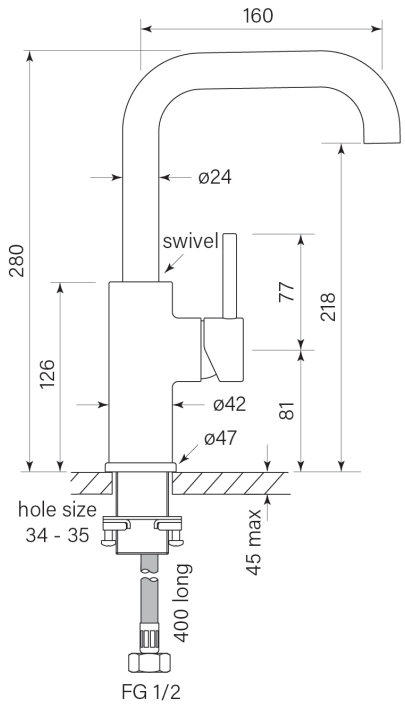
- WELS 5* 6 lpm
- Swivel spout reach 160 mm
- 2 stage flow step valve
- Recessed aerator
- Tap hole size 34-35 mm
- WELS registration number T41021
- To upgrade to the No Pin Handle, order either 34380 smooth, 34381 knurled or 34390 fluted handle along with this mixer and we will supply assembled