PRODUCT SPECIFICATION

30671

PEGASI DUAL SHOWER 900 CRV 90RND, 250

FEATURES

- WELS 3* 9 lpm
- Water enters top bracket
- 250 mm round head
- Slim 90mm round brass hand shower
- Swivel arm with 412 mm reach
- 900 mm rail length
- Hand shower 45 mm from centre of rail
- Custom arm height available at extra cost
- WELS registration number S17034
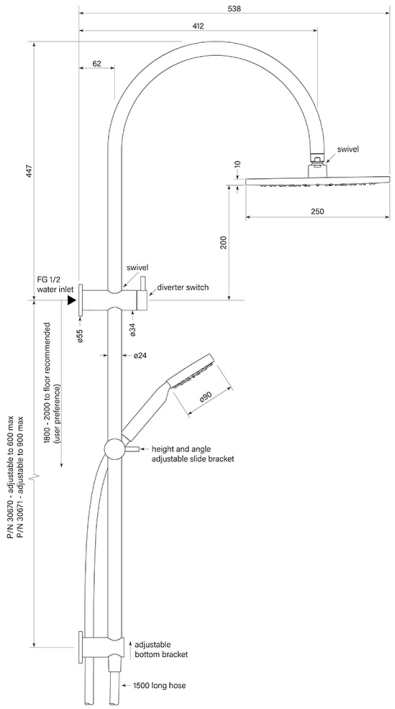
BIM CONTENT