PRODUCT SPECIFICATION

30571
CASCADE DUAL SHOWER 900

FEATURES

- WELS 3* 9 lpm
- Water enters top bracket
- 206 mm round head
- Swivel arm with 412 mm reach
- 900 mm rail length
- Brass hand shower
- Hand shower 45 mm from centre of rail
- Custom arm height available at extra cost
- WELS registration number S17031
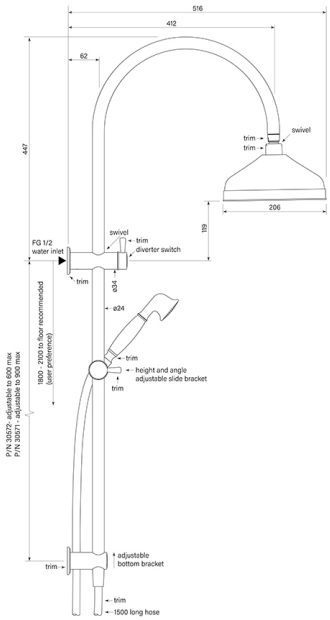
AUSTRALIAN MADE