PRODUCT SPECIFICATION

30569
CASCADE SINK MIXER CURVE 220

FEATURES
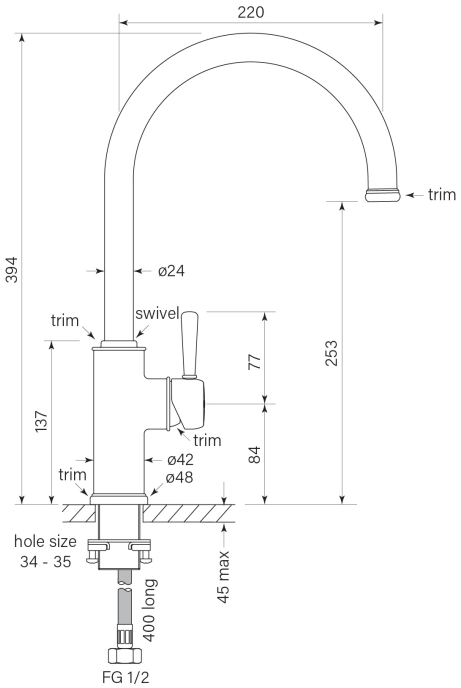
- WELS 4* 7.5 lpm
- Swivel spout reach 220 mm
- 2 stage Flowstep™ valve
- 34-35 mm sink hole
- WELS registration number T41033