PRODUCT SPECIFICATION

30481

CASCADE SINK SET, VANITY, CD LEVER

FEATURES
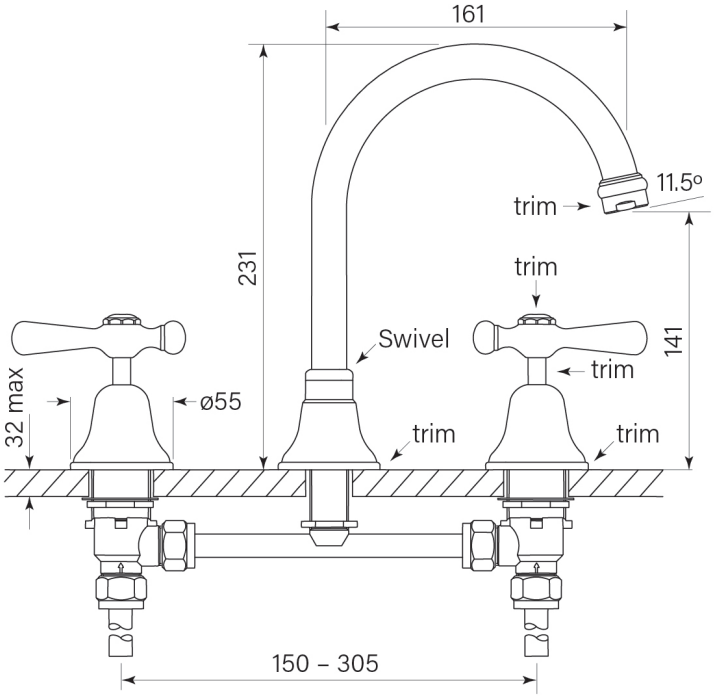
- WELS 4* 7.5 lpm
- Swivel spout 161 mm reach
- Smooth action 1/4 turn ceramic disc valves
- Mount handles through 32-35 mm holes
- Mount spout through 24-30 mm hole
- Max 32 mm mount thickness
- WELS registration number T20683 / T20685 (V)