PRODUCT SPECIFICATION

30461

CASCADE WASHING MACHINE TAP PR, CD LEVER

FEATURES
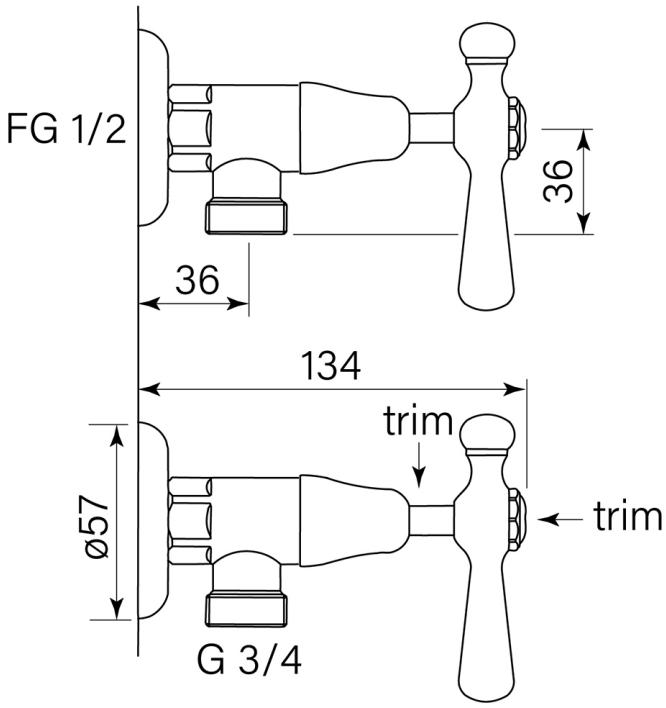
- Smooth action 1/4 turn ceramic disc valves
- 65 mm backplates
- 3/4" outlet connection