PRODUCT SPECIFICATION

30401
CASCADE BASIN SET, CD LEVER

FEATURES
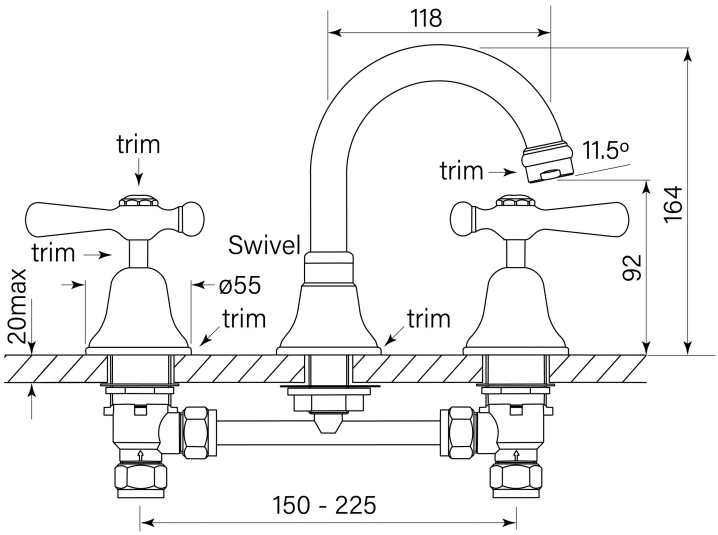
- WELS 5* 6 lpm
- Swivel spout 118 mm reach
- Smooth action 1/4 turn ceramic disc valves
- Mount handles through 32-35 mm holes
- Mount spout through 24-30 mm hole
- Max 20 mm mount thickness
- WELS registration number T20704 / T20704 (V)